LENOVA™
EIGHT ELEMENTS OF SINKS

Stainless Steel

Stainless Steel
- PermaClean Sinks
- Zero Radius Collection
- One-Half Radius Collection
- Top Mount Sinks
- Entertainer Sink
- 16 Gauge Classic
- 18 Gauge Classic
- Steel Apron Collection
- Specialty Group
- Bath Collection
- Laundry Sink
- Ledge Sink

Porcelain
Bamboo
Copper
Bronze
Stone
Glass
Composite
Accessories
Solid Stainless Steel Faucets
FireClay Sink
Aqualogic

Show All Pages

Small Single Bowl Undermount

Small Single Bowl Undermount

PC-SS-0Ri-S15

Product Warranty Download | Product Specifications Download | DFX Files Download

Lenova Stock #	PC-SS-0Ri-S15
Mount Style	UM
Overall Dimensions	15 1/2 x 17 1/2
Bowl Dimensions	L: 14 x 16 x 10
Gauge	16
Weight (lbs)	25.00

Accessories, Grids & Cutting Boards

for Small Single Bowl Undermount PC-SS-0Ri-S15Related Product

Accessories

A-SP-05
Sink Drain A-SP-05

A-SP-01
Polished Chrome Finish

A-SP-03
Antique Bronze Finish

A-SP-04
Oil Rubbed Bronze Finish

A-SP-08
Sink Drain A-SP-08

A-SP-06
Sink Drain A-SP-06

GPCS15

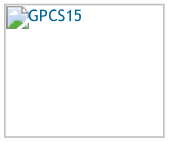

Lenova Sinks

4580 W Roosevelt Rd.
Hillside, IL 60162

Phone: 877-733-1098
Fax: 708-234-1351
Email: order@lenovasinks.com

LenovaSinks.com

Home
About Us
Contact Us
Products
Technical Data
Press Room
Rep Login
Newsletter Sign Up

The Eight Elements Of Sinks

Stainless Steel
Porcelain
Bamboo
Copper
Bronze
Stone
Glass
Composite
Specs & Accessories

CONCETTO
Single-lever sink mixer 1/2"
MODEL # 32665

Pure Freude an Wasser

GROHE

GROHE America, Inc | 200 North Gary Avenue, Suite G, Roselle, IL 60172
Phone: +1 (800) 444-7643 | Fax: +1 (800) 225-2778 | us-customerservice@grohe.com

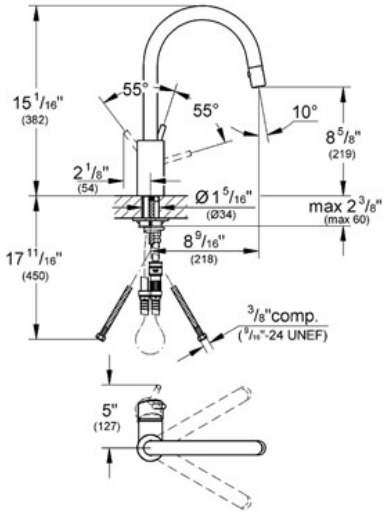

ADA

Product Description:
Single-lever sink mixer 1/2"

Standard Specification:
- **GROHE StarLight®** finish
- **GROHE SilkMove®** ceramic cartridge
- Single hole installation
- Swivel Spout
- Extractable integrated trigger spray
- Integrated non-return valve
- Stainless Steel Braided Flexible Supplies
- Quick installation system
- **Protected against backflow**
- Max Flow Rate 1.75 gpm (6.6 L/min)
- Variable Handle Positioning

Applicable Codes & Standards:
- Energy Policy Act of 1992
- NSF 61
- ASME A112.18.1/CSA B125.1
- US Federal and State material regulations
- ICC/ANSI A117.1
- CalGreen

Color:
- ❑ 32665 001 chrome
- ❑ 32665 DC1 supersteel